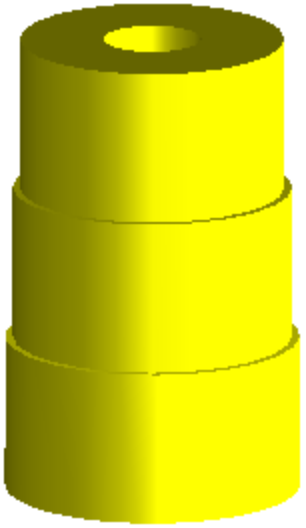

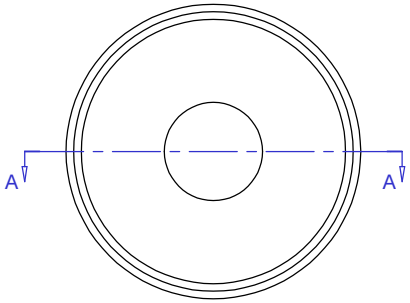

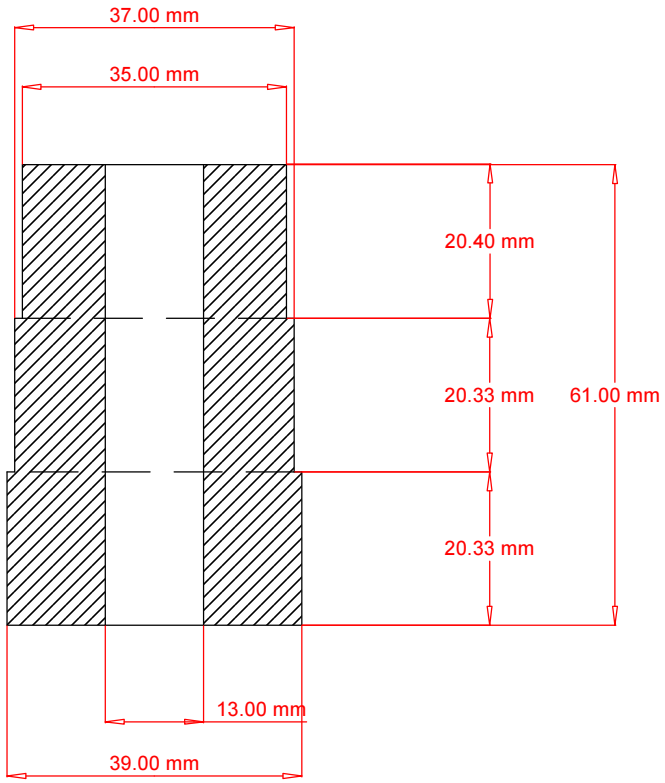

NOTES:

1. MATERIAL: POLYURETHANE SHORE A 70
2. COLOUR: YELLOW
3. ALL DIMENSIONS AS PER FINISHED PART
4. VOLUME: 57618 mm3
   WEIGHT: 67 grams

No.	REVISION	BY	CHKD	DATE
0	ORIGINAL ISSUE	P.S.		03/08/10

MACHINING, WELDING & FABRICATION TOLERANCES UNLESS NOTED OTHERWISE
(ALL DIMENSIONS IN MILLIMETRES)
HOLE CENTRES ± 0.2
WELDING PROCESS TYPE – TIG
TOLERANCES – UNLESS NOTED

MACHINED SURFACES 0.2

INTEGER (X)	±0.3
1–DECIMAL (.X)	±0.1
2–DECIMAL (.XX)	±0.05
ANGULAR	±0.5

DESCRIPTION
UNIVERSAL BUMPSTOP

© COPYRIGHT. ALL RIGHTS RESERVED
THIS DRAWING IS STRICTLY CONFIDENTIAL AND MUST NOT BE COPIED, REPRODUCED OR ADAPTED, NOR MAY ARTICLES BE MANUFACTURED IN ACCORDANCE WITH THE DRAWING WITHOUT PRIOR WRITTEN PERMISSION OF POWERFLEX.

POWERFLEX
EPTG LTD

MATERIAL
POLYURETHANE SHORE A 70

DRAWING No.
BS003

REV
0